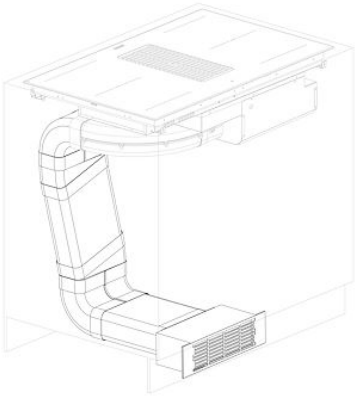

KIT FILTRE VENTO

Accessories e Complements

Code: A700 D80

DETAILS

Material	Stainless steel mask
Full description	plinth height 100/150 mm
Type of accessory	Hoods accessories